SERVISEAL®

External PVC waterstop system for passive protection of movement joints and construction joints in reinforced concrete structures

Product Applications

SERVISEAL® is a passive external PVC waterstop system manufactured in a range of sizes for protecting joints in concrete basements and sub-structures.

SERVISEAL® external flexible waterstop systems have a proven design using four T shaped ribs for solid embedment in in-situ concrete which create a valve action to seal the water path, and are suitable for horizontal and vertical applications. Being cast into the outside water face prevents the ingress of moisture and protects the outer layer of reinforcement from corrosion. Location on the outside face of a concrete member also promotes better compaction of the concrete around the ribs of the SERVISEAL® since it is free from reinforcement congestion and the weight of wet concrete makes consolidation easier.

SERVISEAL® can be used for non-suspended slabs in water retaining structures such as reservoirs, swimming pools and sewage treatment tanks.

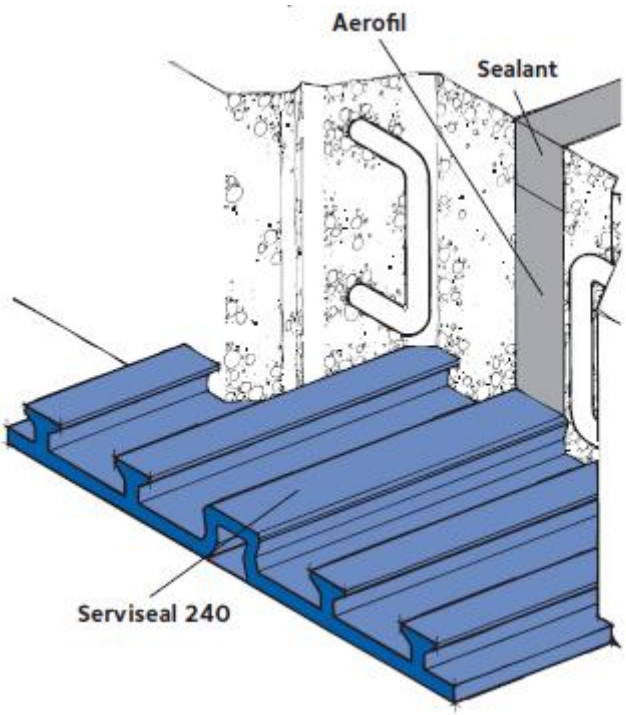

Details shown are typical illustrations only and not working drawings. For assistance with working drawings and additional technical advice please contact GCP Technical Services.

Advantages

- Proven design - the original external waterstop used extensively in water excluding and water retaining structures
- Flexible - will accommodate movement during construction and service life
- External seal - protects reinforcement from water ingress
- Pliable - remains flexible at low temperatures
- Four ribs - provide extended and tortuous water path
- Stabilising/Nailing flange - allows fastening without damaging waterstop and prevents displacement or folding of ribs during concreting
- Pre formed junction pieces - factory made range of standard junction pieces.

Limitations

SERVISEAL® is not suitable for walls of water retaining structures which should always have SERVITITE® waterstops cast centrally in the concrete wall to resist the internal water pressure.

Installation

A continuous waterstop network should be used at all joints to prevent the ingress of moisture using only factory produced fabrications for changes of direction or profile with site jointing limited to simple butted welds. Before concreting, waterstops must be clean and free from concrete laitance, oil, grease or any other contamination that might prevent a good waterstop to concrete bond.

The waterstop network should be loose laid direct on to the blinding concrete with timber stop-ends or securely fixed into the vertical shutters using mechanical fixings staggered at 500 mm cross centres.

Health and Safety

There is no legal requirement for a Safety Data Sheet (SDS) for Aerofil. For health and safety questions on these products please contact GCP Applied Technologies. For SERVISEAL® and GCP Sealants read the product label and SDS's before use. Users must comply with all risk and safety phrases. SDS's can be obtained from GCP Applied Technologies or from our web site at gcpat.com. Irritating fumes (Hydrogen Chloride) will be liberated when the product is heat welded. Ensure adequate ventilation.

Supply

Construction/expansion/movement joints

SERVISEAL® 195	10 mcoil wt 19 kg
SERVISEAL® 240	7.5 mcoil wt 20 kg
SERVISEAL® K 320	7.5 mcoil wt 23 kg

Pilecap and angled joints	
SERVISEAL® Pilecap	7.5mcoilwt21kg
Ancillary Products	
Aerofil, GCP Sealants	
Equipment by GCP	
Jointing Jigs	Welding Knives

Jig SERVISEAL® (all sizes)	Electric Knife 110v & 220v

Equipment by Others: Fine tooth saw, wire brush, Stanley knife, 110v or 220v power source, blow lamp or gas torch if nonelectrical mild steel knife is used.

Range of sections - all dimensions nominal

Performance

PROPERTY	TYPICAL VALUES
Tensile Strength	≥ 14 N/mm^2
Elongation at break	> 250%
Shore A Hardness	80 ± 4
Specific Gravity	1.4

All declared values shown in this data sheet are based on test results determined under laboratory conditions and with the product sample taken directly from stock in its original packing without any alteration or modification of its component parts.

NBS Specification Clause

Refer to Clause E40 310.

Factory made junctions and fabrications: Available in all sizes and types in configurations to suit the site requirements, e.g.

This document is only current as of the last updated date stated below and is valid only for use in the United Kingdom. It is important that you always refer to the currently available information at the URL below to provide the most current product information at the time of use. Additional literature such as Contractor Manuals, Technical Bulletins, Detail Drawings and detailing recommendations and other relevant documents are also available on www.gcpat.uk. Information found on other websites must not be relied upon, as they may not be up-to-date or applicable to the conditions in your location and we do not accept any responsibility for their content. If there are any conflicts or if you need more information, please contact GCP Customer Service.

Last Updated: 2018-11-30